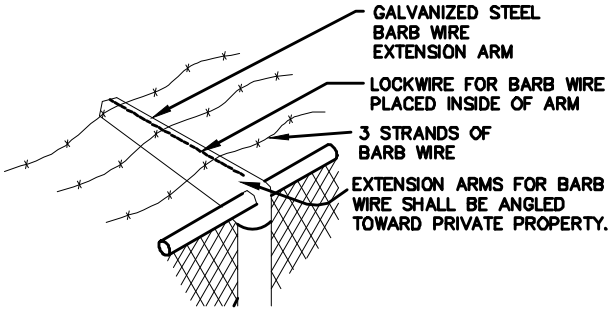

LINE POST TOP

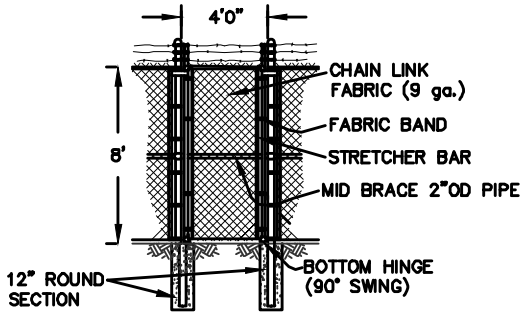

MAN GATE

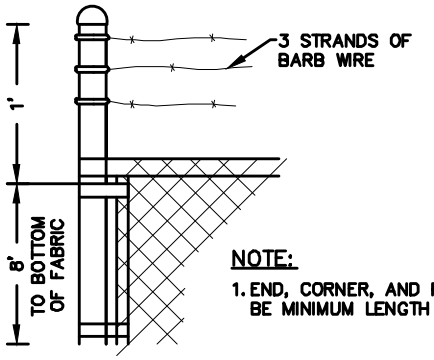

NOTE:

1. END, CORNER, AND PULL POSTS SHALL BE MINIMUM LENGTH OF 9'–10".

END, CORNER, AND PULL POST TOP

NOTES:

1. FOR ADDITIONAL DETAILS SEE WSDOT STANDARD PLAN L–3.
2. FENCE TO BE PER WSDOT STANDARD SPECIFICATONS FOR ROAD, BRIDGE AND MUNICIPAL CONSTRUCTION, SECTION 8–12.
3. GATE KEEPERS WITH AUTOMATIC LATCH TO BE PROVIDED TO HOLD GATES OPEN.

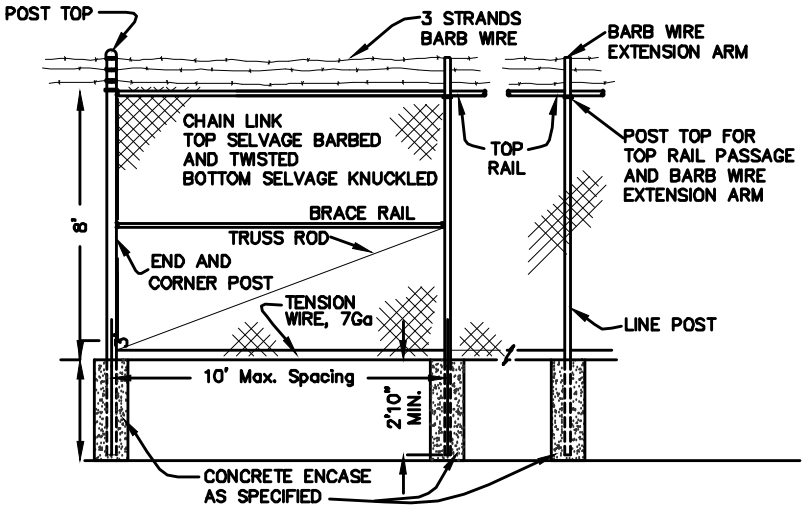

TYPE 1 FENCE

PER 9–16.1(7) W/9–GAUGE FABRIC, TYP.

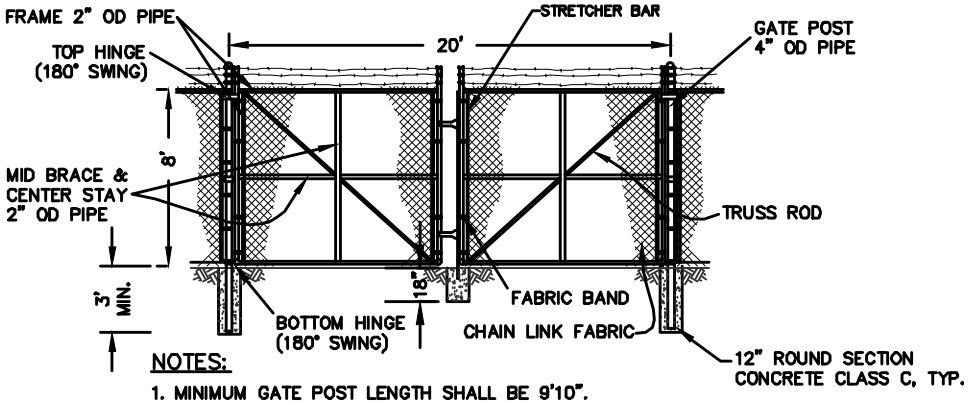

NOTES:

1. MINIMUM GATE POST LENGTH SHALL BE 9'10".
2. CHAIN LINK FABRIC TO MATCH FABRIC ON CHAIN LINK FENCE.

DOUBLE SWING GATE

PUD NO. 1 OF SKAGIT COUNTY ENGINEERING MANAGER

APPROVED ON: MAY16, 2014

Skagit PUD PUBLIC UTILITY DISTRICT

CHAIN LINK FENCE (TYPE 1 FENCE)

SCALE: NTS	STANDARD
DATE: 3-25-05	
REVISED: 5/16/14	WF-1
DRAWN BY: CAS	
APPROVED BY: GJS	